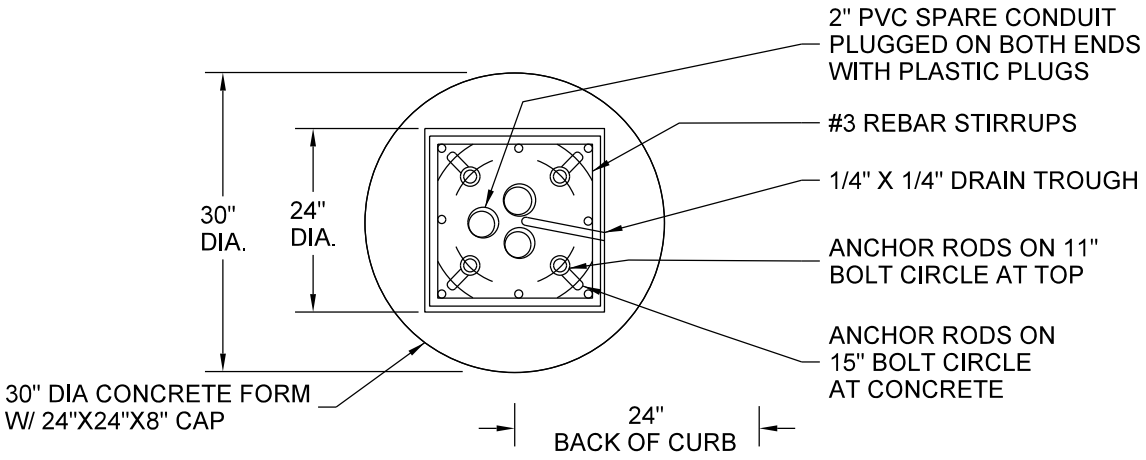

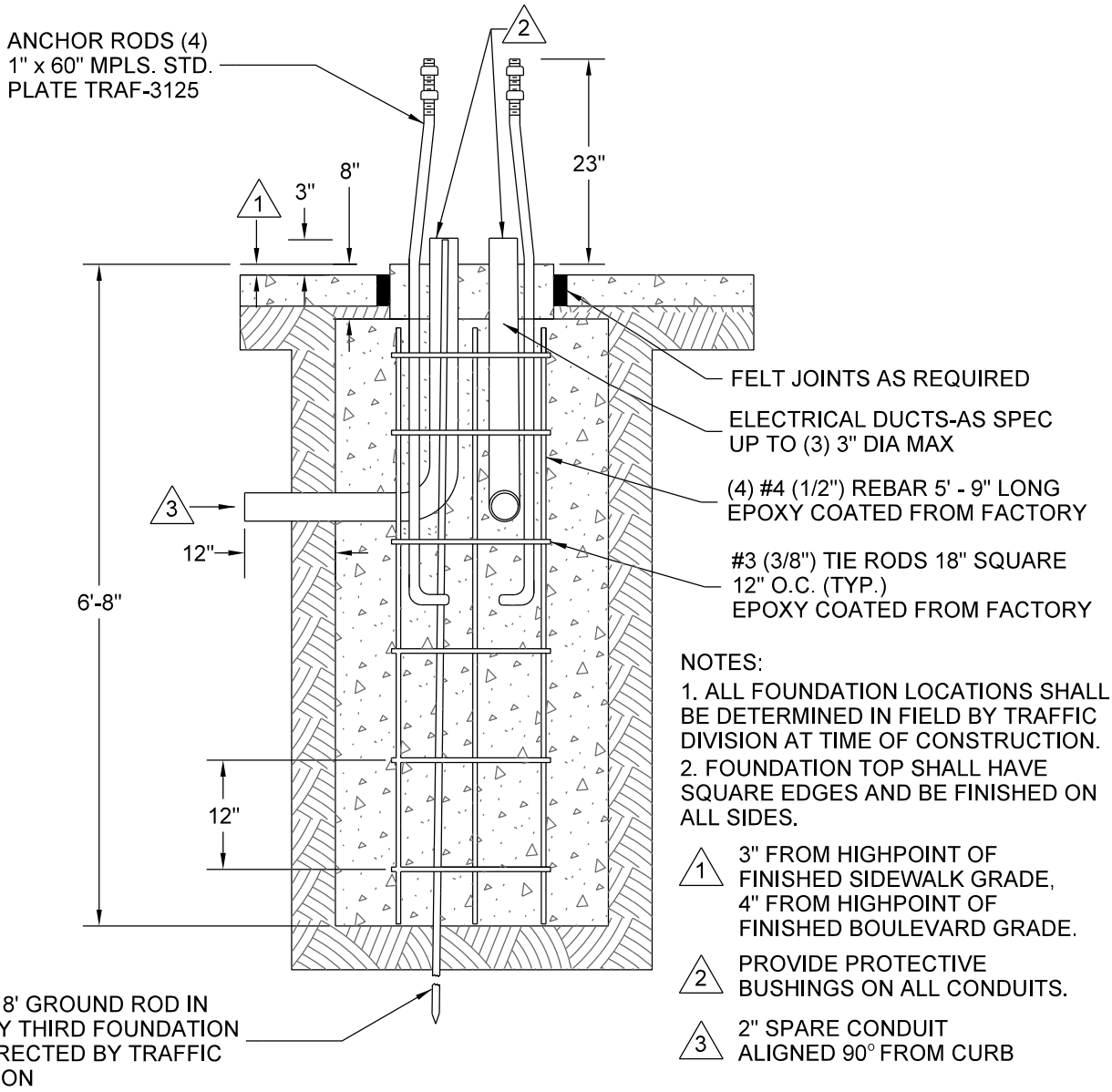

NOTES:

1. ALL FOUNDATION LOCATIONS SHALL BE DETERMINED IN FIELD BY TRAFFIC DIVISION AT TIME OF CONSTRUCTION.
2. FOUNDATION TOP SHALL HAVE SQUARE EDGES AND BE FINISHED ON ALL SIDES.

1 — 3" FROM HIGHPOINT OF FINISHED SIDEWALK GRADE, 4" FROM HIGHPOINT OF FINISHED BOULEVARD GRADE.

2 — PROVIDE PROTECTIVE BUSHINGS ON ALL CONDUITS.

3 — 2" SPARE CONDUIT ALIGNED 90° FROM CURB

NO SCALE

Minneapolis Public Works	DRW: EAV	DATE: 4/23/20	FOUNDATION - ST. LIGHT 30' - SQUARE CAP REFERENCE PLATE: TRAF-3125, TRAF-3010	STANDARD PLATE NO. TRAF-3072-R3
	APP: DRP	DATE: 4/23/20		